□□ □□

8 ''□□ □□ □ □□ □□ □□□□
□□ : KMT-0080U-3CAW

8 ''□□ □□ □ □□ □□ □□□□ □□ □□	
□□ □□	0 ~ 90 % □□ □□, □ □□
□□ □□□□	□□ Rp6 □□
□□□ □□	□□ ± 6KV, □□ ± 8KV
□	DC12V / 2A, 20W (□□)
□□ □□□	36mm
□□ □□	252 (L) * 136 (W) * 26 (T) mm
□□ □□	8 □□ IPS HD □□
□□	1.7 □□□□
□□ □□	3 □□ □□□□ □□□□
□□□	□□

□□□ □□ :

□□□ □□ □□ □□

8" Facial Recognition and Temperature Measurement Kiosk

IP 65 waterproof & dustproof

Infrared temperature measurement

Alarming system

Linux Operating system

Accurate face recognition

Large-capacity face database

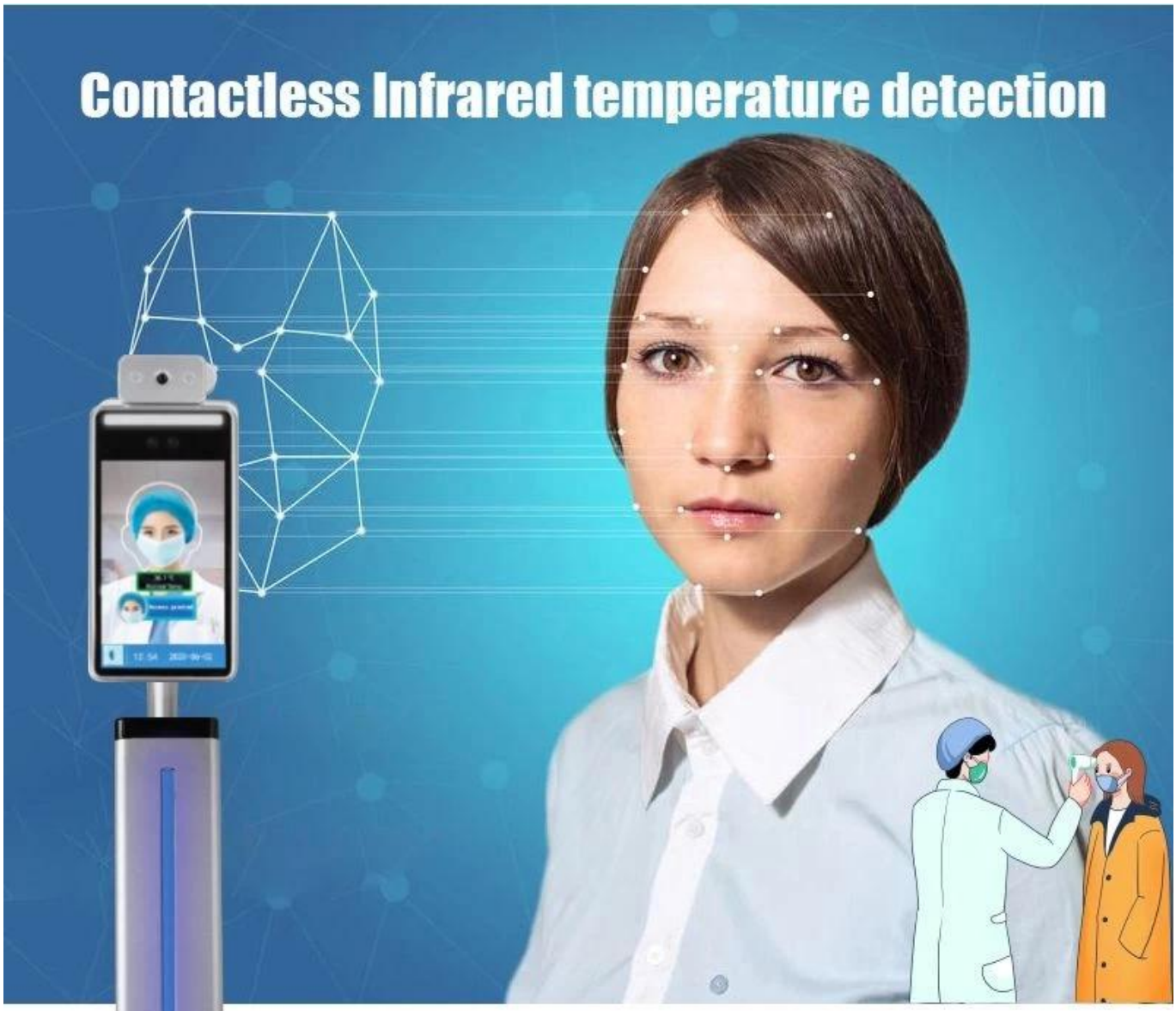

Temperature tolerance: ±0.3°C

Temperature measurement range: 16℃ - 40℃

Detection distance: ≤30cm

Rapid face Recognition: less than 1s

8-inch IPS full-view high-definition display, no image smearing, no delay.
Automatic gain, automatic white balance, make the true color of the image naturally restore.
Built-in black level sensor for video surveillance, low-light recognition is more accurate.

large storage capacity to meet places
with large traffic.
24,000 face database
Support 24000+ face comparison data and 160,000 recognition records.

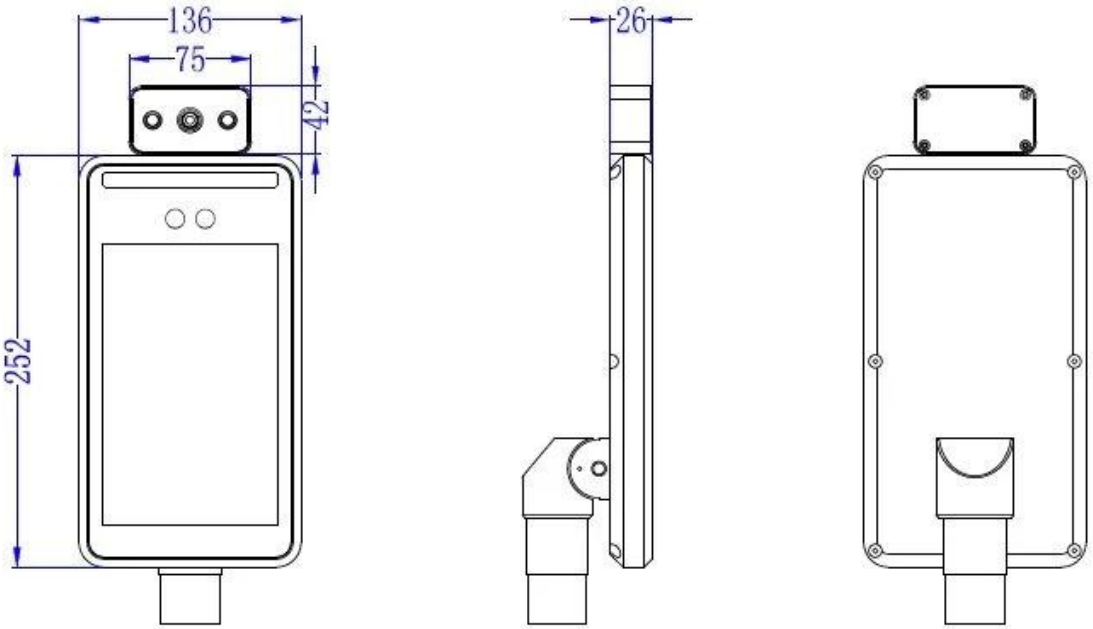
136
75
42
252
26

35.7cm
60cm
35.7cm
110cm

Alarm system for temperature measurement and entry management

Normal temperature: pass

abnormal temperature: can't pass

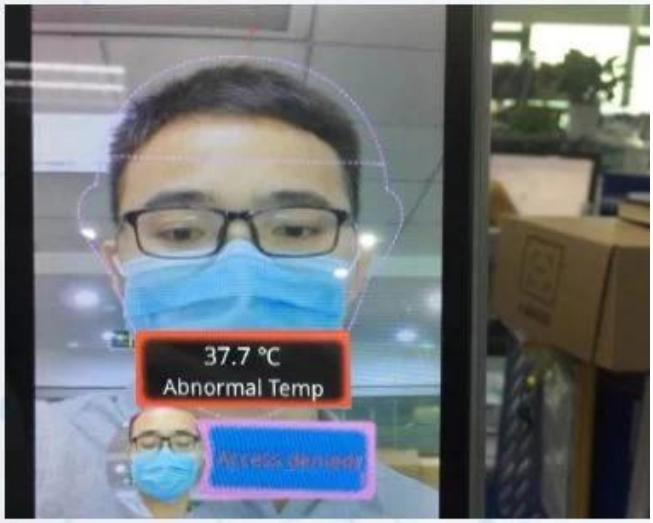

Stranger

☑ Temperature measurement

☒ No entry

Infrared temperature detection module
Binocular wide dynamic camera
36.1 ℃
Normal Temp
Access granted
13:54
2020-06-02
Speaker
60cm/100cm pillar for your option.
2USB

Flexible installation

Application

Bus, supermarket ,school, government, hospital, factory

customized multiple interfaces

□□ □□□

36.1 ℃
Normal Temp
Access granted
13:54 2020-06-02

人脸识别一体机
J2004091X0001
PASSED

36.1 ℃
Normal Temp
Access granted
13:54
2020-06-02

Model	KMT-0080U-3CAW
Hardware	
Processor	Dual Core Processor+ 1G memory + 16G flash
Operating system	Linux Operating system
Storage	Support TF card storage
Viewing angle	Vertical viewing angle: 30°; Horizontal viewing angle: 30°
Sensor	1/2.8" Progressive Scan CMOS(IMX307)
Lens	6mm
Communication	Support 4G \ WIFI \ bluetooth ; can be customized
Speaker	voice playback content can be customized
Temperature measurement performance	Please find the notes on last page
Measurement range	16℃ - 40℃ (Indoor without wind)
Temperature measurement	European original lens
Sensors type	Medical grade European imported sensors
Measurement accuracy	±0.3℃
Temperature resolution	0.1℃
Temperature detection distance	≤30cm
Measurement response time	300ms
Performance	
Recognition	1.2~2.2 meters, angle adjustable
Recognition distance	0.3~1.5 meters, depends on lens
Recognition time	<0.5s
Storage capacity	160,000 capture records
Face capacity	24000pcs
Screen brightness	≥400 cd/m2
Interface	
Switching output	1 way switch output, other GPIO port can be customized
Network interface	1 RJ45 10M / 100M adaptive Ethernet port, Gigabit Ethernet port can be customized
Wiegand interface	1 Wiegand interface input/output
Communication interface	1 RS485 interface
USB interface	1 USB interface
Camera	
Camera	Dual cameras, visible and near infrared, support live detection
Effective pixels	2MP, 1920*1080
Min Illumination	Color 0.01Lux @F1.2(ICR);B/W 0.001Lux @F1.2 (ICR)
SNR	≥50db(AGC OFF)
WDR	120db, ISP algorithm face partial exposure
Function	
Web side configuration	support
remote upgrade	support
LAN/ WAN	support
Regular	
Working humidity	0～90% relative humidity, no condensation
Salt spray	level Rp6 or above
Antistatic	contact ±6KV, air ±8KV
Power	DC12V/2A , 20W(MAX)
Column aperture	36mm
Equipment size	252(L) * 136 (W) * 26 (T) mm
Screen size	8 inches IPS HD screen
Weight	1.7 kg

□□ □ □□

□□ □ □□

□□ □□				□□
□□ □□□ □□				□ 25.3X14.5X14.5 cm
□□ □□□				1.500 □□□□
□□ □□				
□□□□□ □□				430 * 170 * 115mm, □□ : 2.1kg.
□□□□□ □□				500 * 195 * 425mm, □□, G.W : 8.8kg □ 3pcs.
□□□ □□ □□				305 * 51 * 290mm, G.W : 0.3kg.
□□□□ □□ □□				327 * 340 * 317mm, □□, G.W □ 6pcs : 18kg.
0.6m □□□ □□ □□				630 * 132 * 124mm, G.W : 0.3kg.
0.6m □ □□ □□				650 * 280 * 260mm, □□, G.W : 15kg □ 4pcs.
1.1m □□□ □□				1130 * 132 * 124mm, G.W : 0.5kg.
1.1m □□□ □□ □□				650 * 280 * 260mm, □□, G.W : 19.8kg □ 4pcs.
□□ □□				
□□ (□□)	1-100	101-500	501-1000	> 1000
□□ □□□. □□ (□)	□	5	7	□□□□

□□□□ □□

□: □□□ □□□ □□□?

: □□□ □□□□□ □ □□□ 24 □□ □□□ □□. □□□ □□ □□□ □□, □□ □□□ □□ □□□ □□ □ □ □□□ □□□□ □□□□□□.

Q : □□□ □□ □□□ □□□□□?
: □□□ EXW, FOB □□ □□ CIF □□ □□. □□□ □□□ □□□ □ □□□□□□ □□□□□ □□ □□□□□□.

Q : □□ □□ □□ □□□ □□□□□?
: □□□□, □□□ □□ □□□ □□ □□. □□ □□□ 2 □ □□□□□. OEM / OEM □□□□ □□ □□□ □□□□□.