8mil BGA□□□□□□HDI PCB□□□□□□□□□□□□□□PCB□□□□□□□□□

□□□□□□□□□□□□□□□□□□□□□□PCB / 8mil BGA□□□/□□HDI PCB / HDI PCB□□□□/□□□□□□HDI PCB□□□□□
□[□□□□□□**HDI PCB**□□□□□□□□□□]□

TOP QUALITY PCBA

O-LEADING

To Be Reliable, To Be Valuable

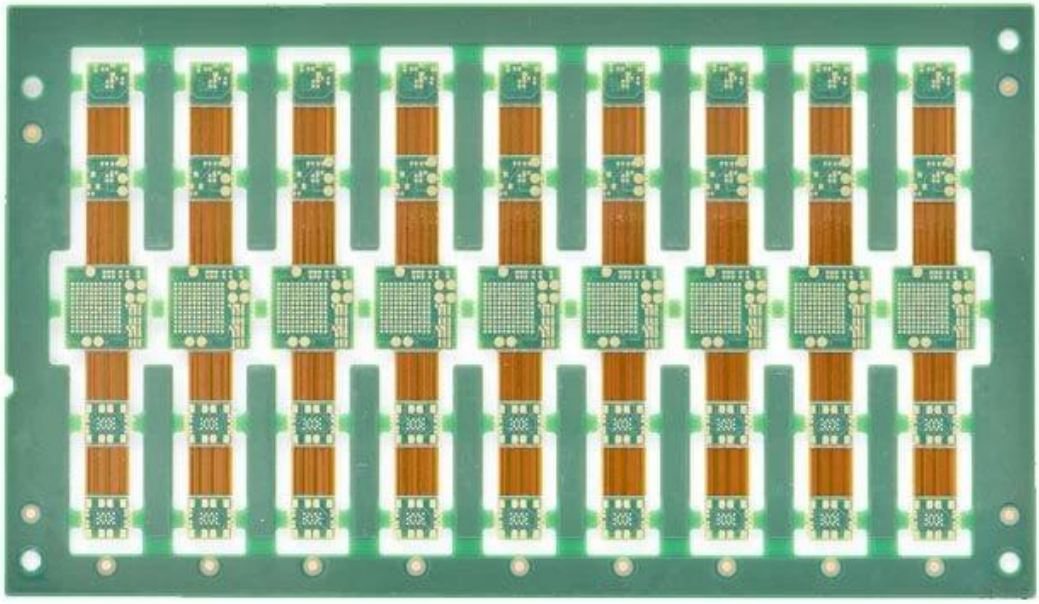

Multilayer HDI PCB

TOP QUALITY PCBA

O-LEADING

To Be Reliable, To Be Valuable

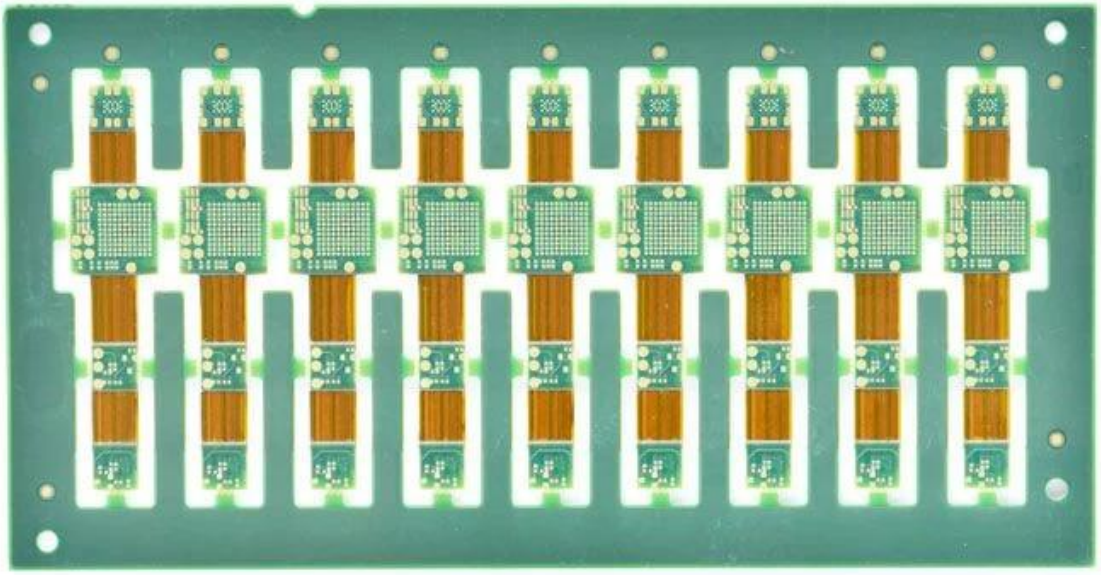

8mil BGA PAD

TOP QUALITY PCBA

O-LEADING

To Be Reliable, To Be Valuable

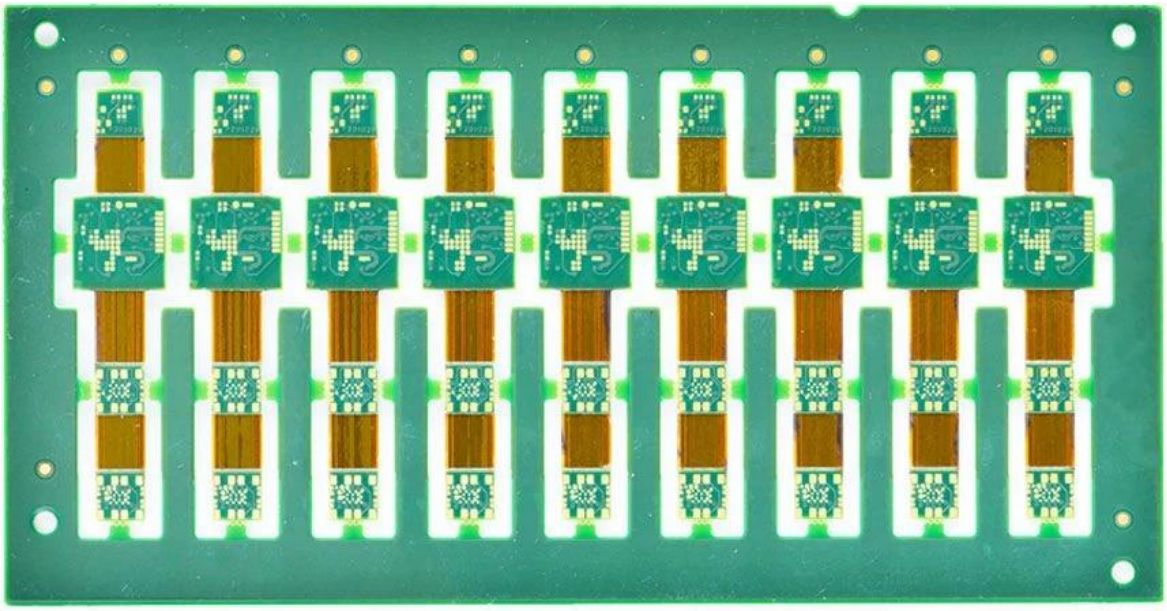

Quick turn HDI PCB

TOP QUALITY PCBA

O-LEADING

To Be Reliable, To Be Valuable

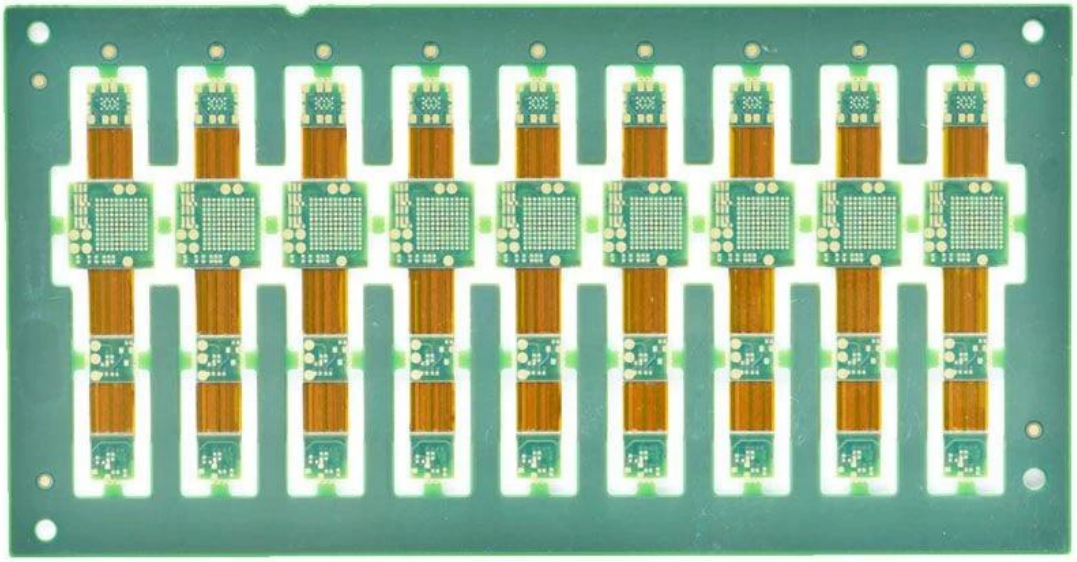

HDI PCB with blind via holes and buried via holes

TOP QUALITY PCBA

O-LEADING

To Be Reliable, To Be Valuable

VOP Comparison

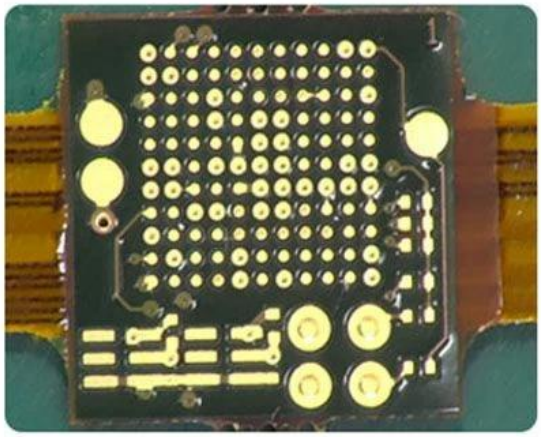

Other competitors is dent in the Pad.

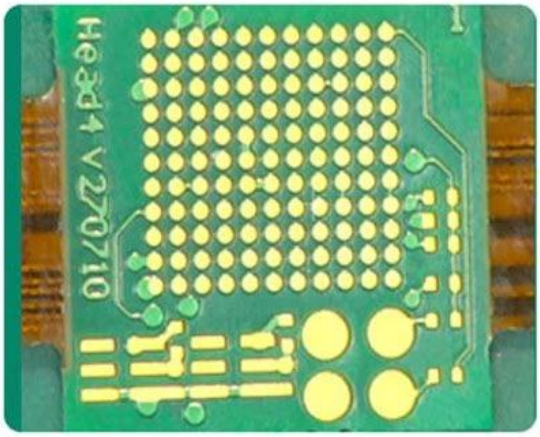

Our PCB is flat.

MAKE YOUR IDEA COME TRUE

TOP QUALITY PCBA

O-LEADING

To Be Reliable, To Be Valuable

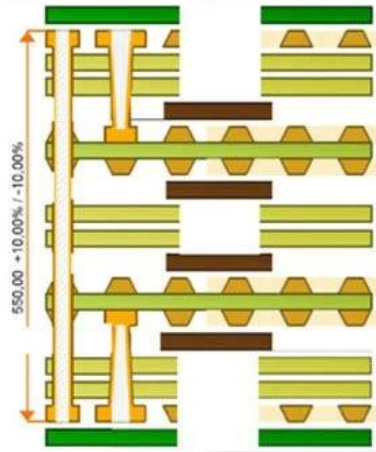

Layer	Stack up	Processed Thickness	Supplier Description	Copper Coverage	Impedance ID	Isolation Distance (Summed)
		50,000	PROBIMER77			
1		45,000	CSC_0.49_12/12_HTE_Punched	0,000		
		58,200	106_38N_Polyimide_No_flow			141,400
		58,200	106_38N_Polyimide_No_flow			-
		25,000	LF7001			-
2		9,000		60,000		
		25,000	KK_0.025_9_9_Du_AP7163E			25,000
3		9,000		60,000		
		25,000	LF7001			192,800
		71,400	1080_38N_Polyimide_No_flow			-
		71,400	1080_38N_Polyimide_No_flow			-
		25,000	LF7001			-
4		9,000		60,000		
		25,000	KK_0.025_9_9_Du_AP7163E			25,000
5		9,000		60,000		
		25,000	LF7001			141,400
		58,200	106_38N_Polyimide_No_flow			-
		58,200	106_38N_Polyimide_No_flow			-
6		45,000	CSC_0.49_12/12_HTE_Punched	0,000		
		50,000	PROBIMER77			

Copper Thickness = 126,000 | Dielectric Thickness = 525,600 | Solder Mask Thickness = 100,000 | Stack Up Thickness = 651,600 | Stack Up Thickness with Soldermask = 751,600

Drill Image	1st Layer	2nd Layer	Column Position	Drill Type	Fill Type
	1	2	2	Laser PTH	None
	1	6	1	Mechanical PTH	None
	6	5	2	Laser PTH	None

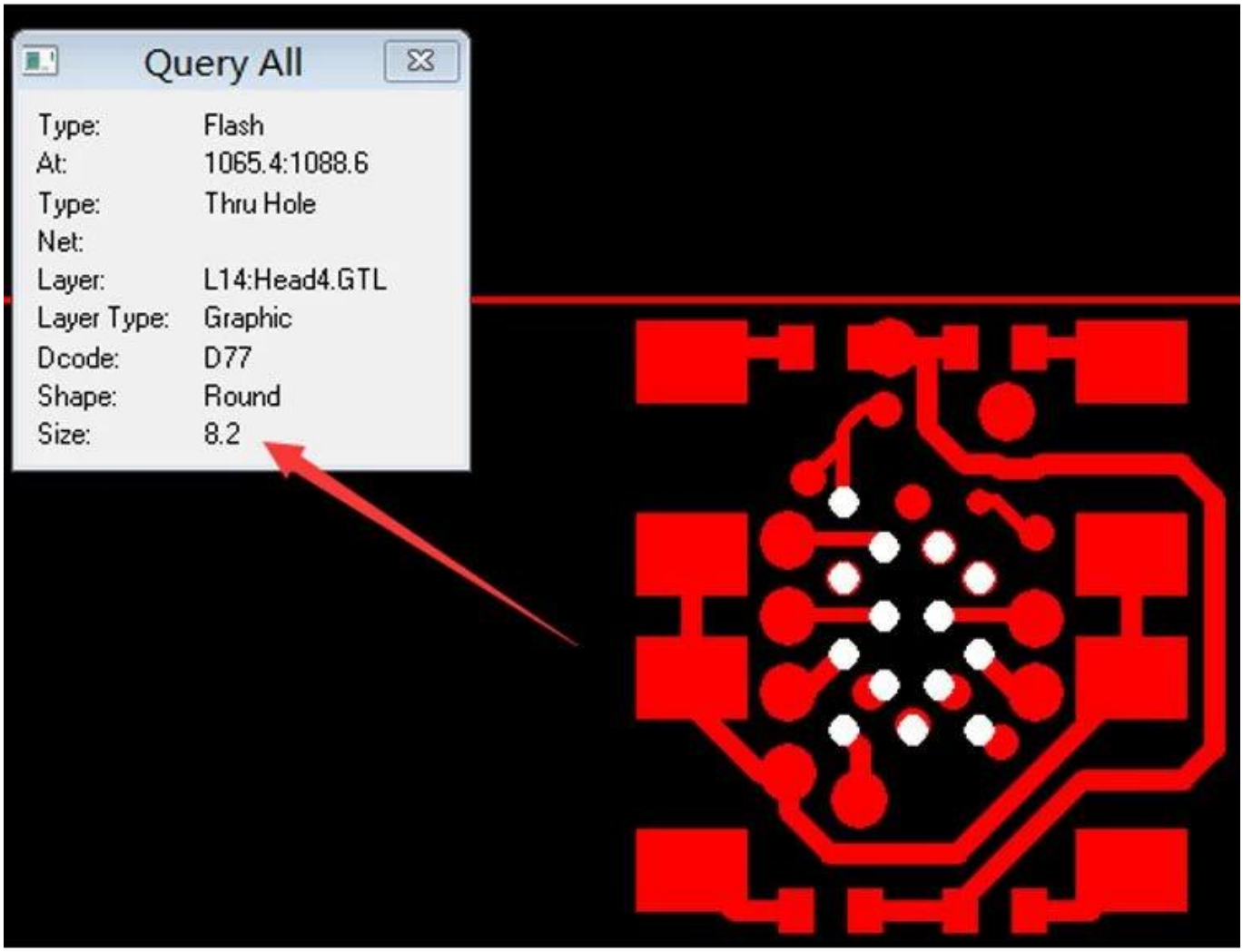
Query All
Type: Flash
At: 1065.4:1088.6
Type: Thru Hole
Net:
Layer: L14:Head4.GTL
Layer Type: Graphic
Dcode: D77
Shape: Round
Size: 8.2

Production Process

18 years experience in one-stop PCB and PCBA,we can make your idea come true,

O-LEADING

To Be Reliable, To Be Valuable

品质至上
Quality Focused

用户满意
Customer satisfaction

永续经营
Exemplary management

Process flow chart

工艺能力 Process Capability

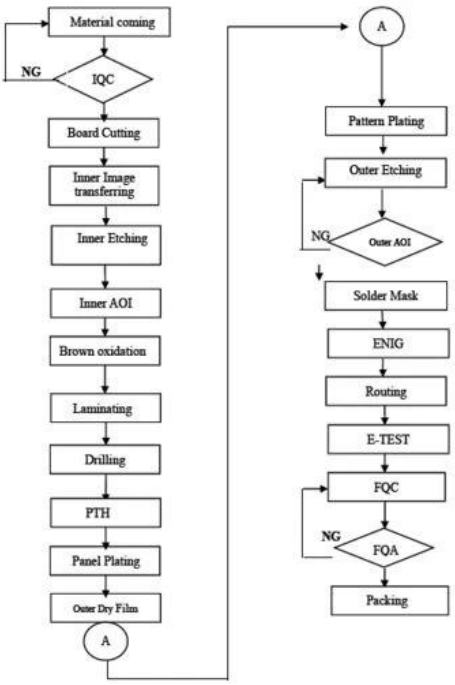

APPLICATION

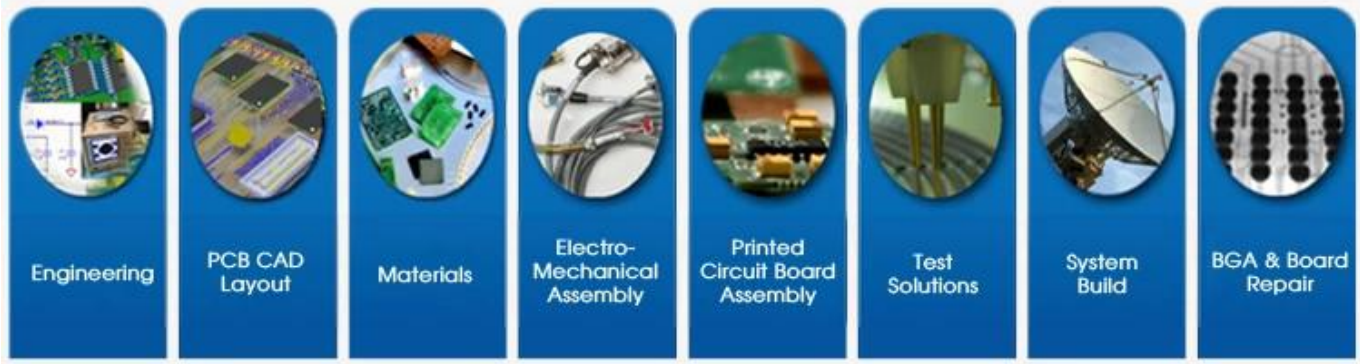

WHY CHOOSE US?

TO BE RELIABLE

Quality first,
Customer supreme,
Scientifically management,
Striving for famous brand

TO BE VALUABLE

Science and technology keeps head,
Put people first,
Be precise and practical,
Contribute sincerely

KEEP LEADING

There's a phrase in Buddhism, 'Beginner's mind.'

It's wonderful to have a beginner's mind.

COMPANY PROFILE

O-Leading strives to be your one stop solution partner in EMS supply chain, including PCB design, PCB fabrication and PCBassembly (PCBA). We provide some of the most advanced PCB technology, including HDI PCBs, multilayer PCBs, Rigid-Flexible PCBs. Wecan support from quick turn prototype to medium & mass Production. In general, our global customers are very impressed with our services: rapid response, competitive price and quality commitment. Providing more valuable technical service and overall solution is the way O-leading forward.

SGS SGS SGS ISO UL

Looking to the future, O-leading will concentrate on the innovation and development of electronics manufacturing technology as always, and make persistent efforts on PCB & PCBA one-stop service to provide first-class services and create more value for ourcustomers. PCB Assembly manufacturer china.

□□□□□□□□□□HDI PCB□□□□

PROCESS CAPABILITY

PCB□□□□	
□□□□□□□□	1LAYER-32LAYER
□□□□□□□□	1/3oz-12oz
□□□□/□□□□	3.0mil / 3.0mil
□□□□/□□□□	4.0mil / 4.0ml
□□□□□□□□	10□1
□□□□□□	0.2mm-5.0mm
□□□□□□□□□□□□□	635 * 1500mm
□□□□□□□	4mil
□□□□□□□□□□□	+/- 3mil
□□□□□/□□□□□□□□AII□□□□	□□
VIA□□□□□□□□□□□□	□□
□□	FR-4□FR-4HIGH TG□□□□□□□□□□□□□□□□□□□□□□□□□□□□□□□□□□□□□□
□□□□□	HASL□OSP□ENIG□HAL-LF□LMM□□□□□□□□□□□LMM□□□□□□□□□□□□□□□□□□□□□□□□□□□

SMT□□□□	
PCB□□	FR-4□CEM-1□CEM-3□□□□□□□□□□□□□FPC
□□PCB□□□	510x1500mm
□□PCB□□□	50×50mm
PCB□□□	0.5mm-4.5mm
□□□□□□	0.5~4mm
□□□□□□□	0201.
□□□□□□□□□□□□□□□	0603□□
□□□□□□□□□□□□	15mm
□□□□□□□□	0.3mm
□□BGA□□□□□□	0.4mm
□□□□□□□□□	+/- 0.03mm

OUR EXHIBITION

PRODUCTION PROCESS

PRODUCTION LINE

PCB PRODUCTION WORKSHOP

AUTOMATIC VACUUM PRESS MACHIN

DRILLING MA CHINE

PATTERN PLATING MACHINE

SCRUBBING MACHINE

DEVELOPING MACHINE

ROUTING MACHINE

SMT PRODUCTION WORKSHOP

OUR CUSTOMER REVIEWS

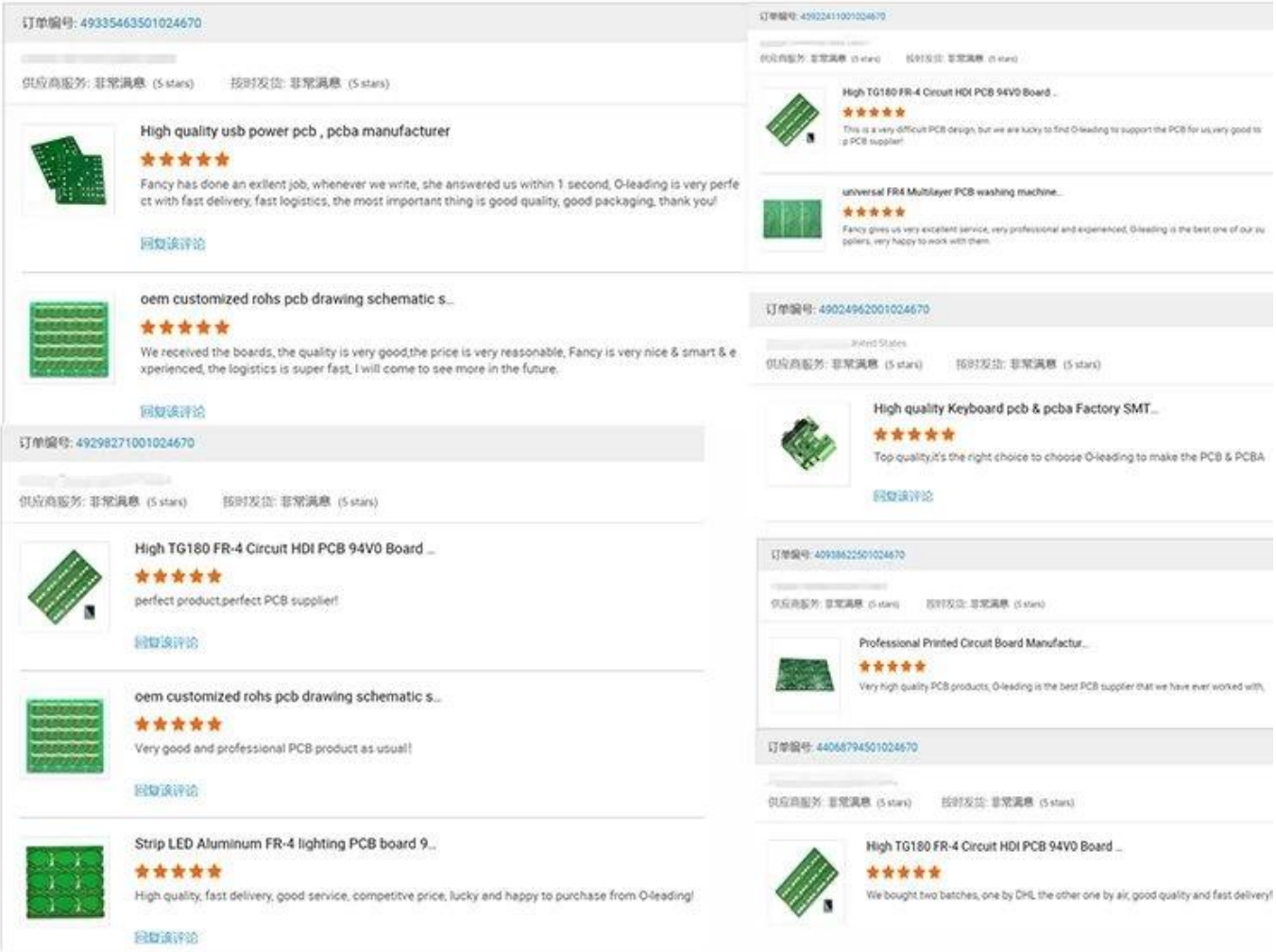

订单编号: 49335463501024670

供应商服务: 非常满意 (5 stars) 按时发货: 非常满意 (5 stars)

High quality usb power pcb , pcba manufacturer

Fancy has done an exllent job, whenever we write, she answered us within 1 second, O-leading is very perfe ct with fast delivery, fast logistics, the most important thing is good quality, good packaging, thank you!

回复该评论

oem customized rohs pcb drawing schematic s...

We received the boards, the quality is very good,the price is very reasonable, Fancy is very nice & smart & e xperienced, the logistics is super fast, I will come to see more in the future.

回复该评论

订单编号: 49298271001024670

供应商服务: 非常满意 (5 stars) 按时发货: 非常满意 (5 stars)

High TG180 FR-4 Circuit HDI PCB 94V0 Board ...

perfect product,perfect PCB supplier!

回复该评论

oem customized rohs pcb drawing schematic s...

Very good and professional PCB product as usual!

回复该评论

Strip LED Aluminum FR-4 lighting PCB board 9...

High quality, fast delivery, good service, competitve price, lucky and happy to purchase from O-leading!

回复该评论

High TG180 FR-4 Circuit HDI PCB 94V0 Board ...

This is a very difficult PCB design, but we are lucky to find O-leading to support the PCB for us,very good to p PCB supplier!

universal FR4 Multilayer PCB washing machine...

Fancy gives us very excellent service, very professional and experienced, O-leading is the best one of our su pplers, very happy to work with them.

订单编号: 49024962001024670

United States

供应商服务: 非常满意 (5 stars) 按时发货: 非常满意 (5 stars)

High quality Keyboard pcb & pcba Factory SMT...

Top quality,it's the right choice to choose O-leading to make the PCB & PCBA

回复该评论

订单编号: 40938622501024670

供应商服务: 非常满意 (5 stars) 按时发货: 非常满意 (5 stars)

Professional Printed Circuit Board Manufactur...

Very high quality PCB products, O-leading is the best PCB supplier that we have ever worked with.

订单编号: 44068794501024670

供应商服务: 非常满意 (5 stars) 按时发货: 非常满意 (5 stars)

High TG180 FR-4 Circuit HDI PCB 94V0 Board ...

We bought two batches, one by DHL the other one by air, good quality and fast delivery!

LISTEN TO CUSTOMER VOICE

订单编号: 40903347501024670

供应商服务: 非常满意 (5 stars) 按时发货: 非常满意 (5 stars)

Strip LED Aluminum FR-4 lighting PCB board 9...

★★★★★

Very fast delivery! Fantastic, good job!!!

Professional Printed Circuit Board Manufactur...

★★★★★

Very happy to great support from O-leading,they are not only professional on the PCB, but also provide good PCBA products, very good supplier!!!

hot sale rigid-flexible PCB with 0.2mm BGA an...

★★★★★

very professional supplier

High Quality custom FPCB/Flex PCB/FPC/Flexi...

★★★★★

Good product

OEM ODM PCBA Bluetooth Wireless Marking G...

★★★★★

high soldering quality

Electronic parts haptic pcba Circuit Board asse...

★★★★★

Very Good product

订单编号: 36919647001024670

供应商服务: 非常满意 (5 stars) 按时发货: 非常满意 (5 stars)

AML-S802 Quad-core Android embedded boar...

★★★★★

Good products

Fast delivery low cost pcb fabrication O-leadin...

★★★★★

Good supplier

Lidar IR Sensor board pcba(H08R6x)

★★★★★

perfect product

Customized PCBA design PCB design

★★★★★

perfect

Audio Speaker and Headphone Jack (H07R3x)

★★★★★

High quality, good

订单编号: 37378603001024670

供应商服务: 非常满意 (5 stars) 按时发货: 非常满意 (5 stars)

Raspberry pi 0 Zero Raspberry Pi Zero Pi W ver...

★★★★★

Fantastic products!!

double layer pcb with red S/M and LF-HASL su...

★★★★★

Good!

half hole pcb, half hole pcb module, half hole m...

★★★★★

Top half hole pcb supplier, very perfect goods

High Quality custom FPCB/Flex PCB/FPC/Flexi...

★★★★★

this rigid-flexible pcb quality is perfect!

Electronic parts haptic pcba Circuit Board asse...

★★★★★

Very satisfied with O-leading products and quality,especially their on-time delivery, fantastic!

Be kind to your client, because he has many choices, but he chooses you instead.

FAQ

1.□□□

1.1□□□□□ISO 9001□2008□□□□□□□□□□□□□□□□□□
1.2□□□□□□□□□□□□□□□□□□□□□□□□□□□
1.3□□□□□□□□□□□□□□□□□□□□□□□□□□□X□□□□□AOI□□□□□□□□□□□□□ICT□□□□□□□□□
1.4□□□□□□□□□□□□□□□□□□□□□□□□□□
1.5□□□□□□□□□□□□□□

2.□□□□□□□□□□□□□□□□□□□□□□□□
□□10□□□□□□□□□□□□□□□□□□□□□□□□□□□□2□3□□□□□□□□□□□□□□□□□□□RMB□□□□□31□□□□□□□□□□□□□□□□□□□□□□□□□□□□□□□□□□□□□
□□□□□O-□□□
□□

3.□□□□□□□□□□□□□□□□□□□□□□□□□□□□
□□□□FR4□□TG□□□□□□□□□□□□□□□□□□□□□□□□□□□□□□□□□□□□/□□□□□□□□□□PI□□

4. PCB□PCBA□□□□□□□□□□□□□□□□□□□□□
4.1 BOM□□□
4.2 PCB Gerber□□□
4.3 PCB□□□□□PCBA□□□□□□□□□
4.4□□□□□
4.5□□□□□□□□□□□□□□□□□□

5.□□PCB□□□□□□□□□□□□□□□□□□□□
□□□□→□□□□□□□□□→□□□□□□□□□□→□□AOI→□□□□□□→□□□□□□□□→□□□→PTH→□□□□□□→□□□□□□□□□□□□→□□□□□□□→□□→□
□□□□□□→□□□□□→□□□□□□→E / T→□□□□□

6. HDI□□□□□□□□□□□□□□□□□□
□□□□□□□□□□□□□□□□□□□□□□□□□□□□□□□□VCP□□□□□□□□□□□LDI□□□□□□□□□ □□□□□□□□□□□□□□□□□□□□□□□□□□□□□□□□□□□□□□□
□□□□

7. Surface Finish O-Lead□□□□□□□□□□□□□□
O-□□□□□□□□□ENIG□OSP□LF-HASL□□□□□□□□□□□□□□/□□ HDI
□□□□□□□□□□□□□OSP□ENIG□OSP + ENIG□BGA□□□□□□□0.3 mm□□□□□□□□□□□□□□□□□OSP OSP + ENIG□□□□□□□□□□□
□□□□□

8. FPC□□□□□□□□□□ o-Source SMT□□□□□□□□□□□□□□
o-Lidge□□□□□8□□FPC□□□□□□□□□□□□□□□□□□□□□□□2000mm * 240mm□□□□□□□□□□□□□□□□□□□□□□□□□□□□□□□□□□□□□□
□□□□□□□□□□□□□SMT□□□□□□□□□□□□□□□□□□□□□□□□□

PCB□□□□□□□□□□□□□□□□□□□□□□
□□;
□□□□□
□□□□

[illegible]
PCB[illegible]
[illegible];
[illegible]

10. PCB[illegible]PWB[illegible]FPC[illegible]
[illegible]PCB[illegible]
[illegible]PWB[illegible]
FPC[illegible]

11. PCB[illegible]
PCB[illegible]
[illegible]TG[illegible]
[illegible]CTE[illegible]
[illegible]250℃[illegible]50[illegible]PCB[illegible]
[illegible]/[illegible]PCB[illegible]
[illegible]&